USS Series Multi Port
USB Connector Type „A"

dual port right angle; soldertail

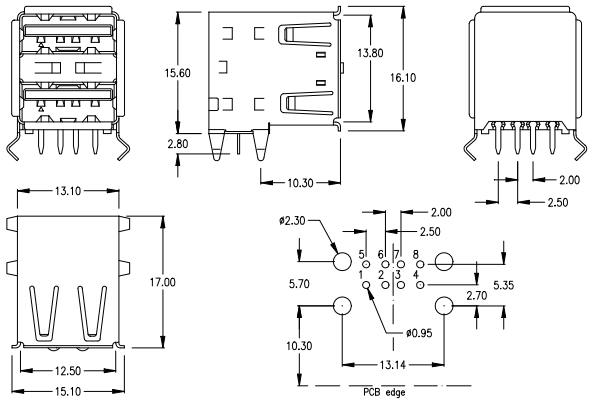

ORDER CODE:

USB 1.0 corresponding **USS - W08 - RA02 - 95** (**- B08 -** if black housing)
USB 2.0 corresponding **USS - W08 - RA22 - 98** (**- B08 -** if black housing)

dual port "low profile" right angle; soldertail

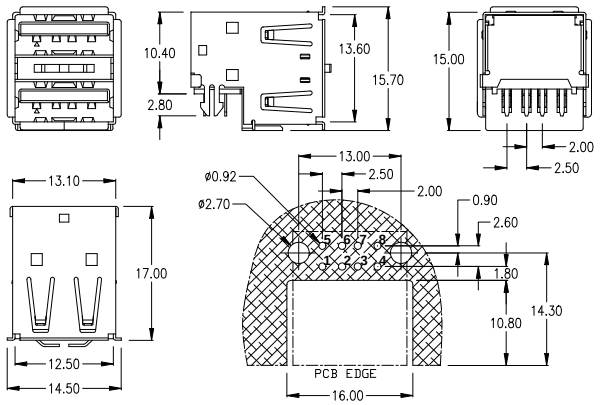

ORDER CODE:

USB 1.0 corresponding **ULS - W08 - RA02 - 95** (**- B08 -** if black housing)
USB 2.0 corresponding **ULS - W08 - RA22 - 98** (**- B08 -** if black housing)

triple port right angle; soldertail

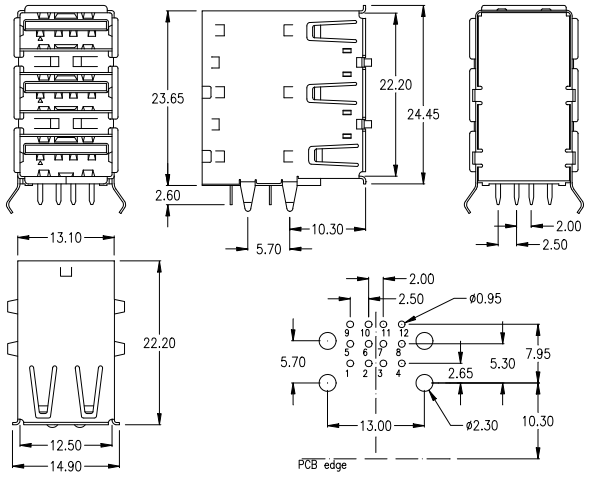

ORDER CODE:

USB 1.0 corresponding **USS - B12 - RA03 - 95** (**- W12 -** if white housing)
USB 2.0 corresponding **USS - B12 - RA23 - 98** (**- W12 -** if white housing)

quad port right angle; soldertail

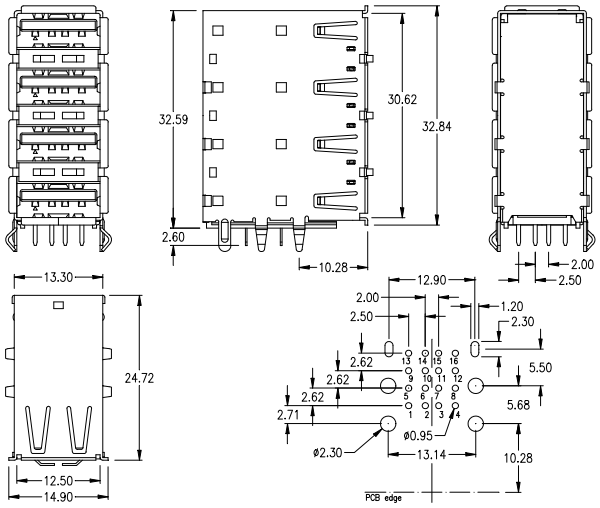

ORDER CODE:

USB 1.0 corresponding **USS - B16 - RA04 - 95** (**- W16 -** if white housing)
USB 2.0 corresponding **USS - B16 - RA24 - 98** (**- W16 -** if white housing)

dual port "top entry"; soldertail

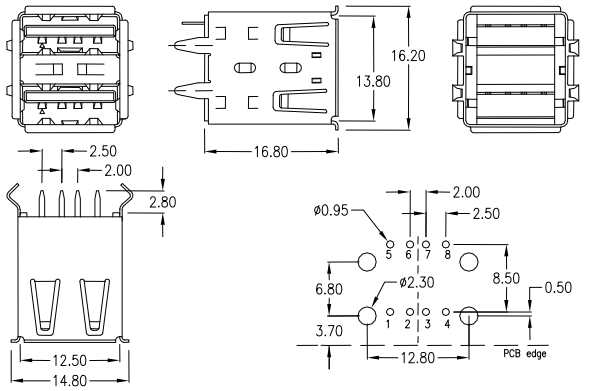

ORDER CODE:

USB 1.0 corresponding **USS - W08 - TA02 - 95** (**- B08 -** if black housing)
USB 2.0 corresponding **USS - W08 - TA22 - 98** (**- B08 -** if black housing)

USB / RJ45 Combi Multi Port

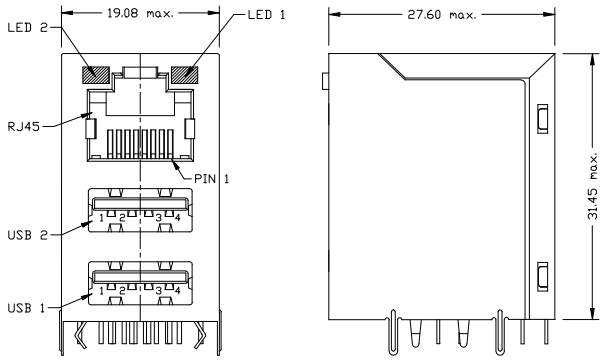

E-tec also offers a USB / RJ45 Combi Multi Port as TX filtered transformer type with integrated LED. Datasheets of the different available variations can be obtained on www.e-tec.com or from your closest E-tec sales office.

Specification

Material

Contact	*(RoHS compliant)*	Phosphor Bronze
Plating:		
Contact area		Au flash over Ni (USB 1.0 corresponding) Au 30µ" over Ni (USB 2.0 corresponding)
Solder area		Sn *(leadfree)*
Housing	*(RoHS compliant)*	PBT UL 94-V0
Shell	*(RoHS compliant)*	Brass, 80µ"-120µ" Ni plated

Mechanical

Mating cycles	1.500 min.

Electrical

Current rating	1,5 A max. 1 Contact (Signal only)
Voltage rating	30V AC (rms)
Withstanding voltage	750V AC (rms) 1 Minute (USB 1.0) 500V AC (rms) 1 Minute (USB 2.0)
Insulation resistance	1.000MΩ min. (500V DC)
Contact resistance	30mΩ max.

Others

Operating temperature	-55° C to +85° C